eduard

EDUARD DECALS

Made in Czech Republic

SCALE
1/48

Spitfire Mk.IX stencils

ITEM #
D48015

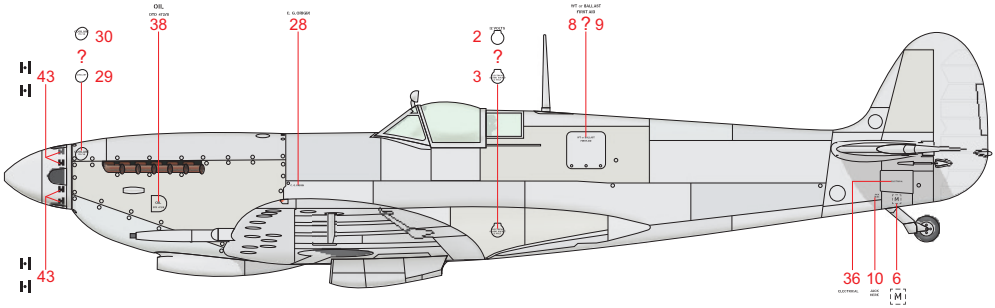

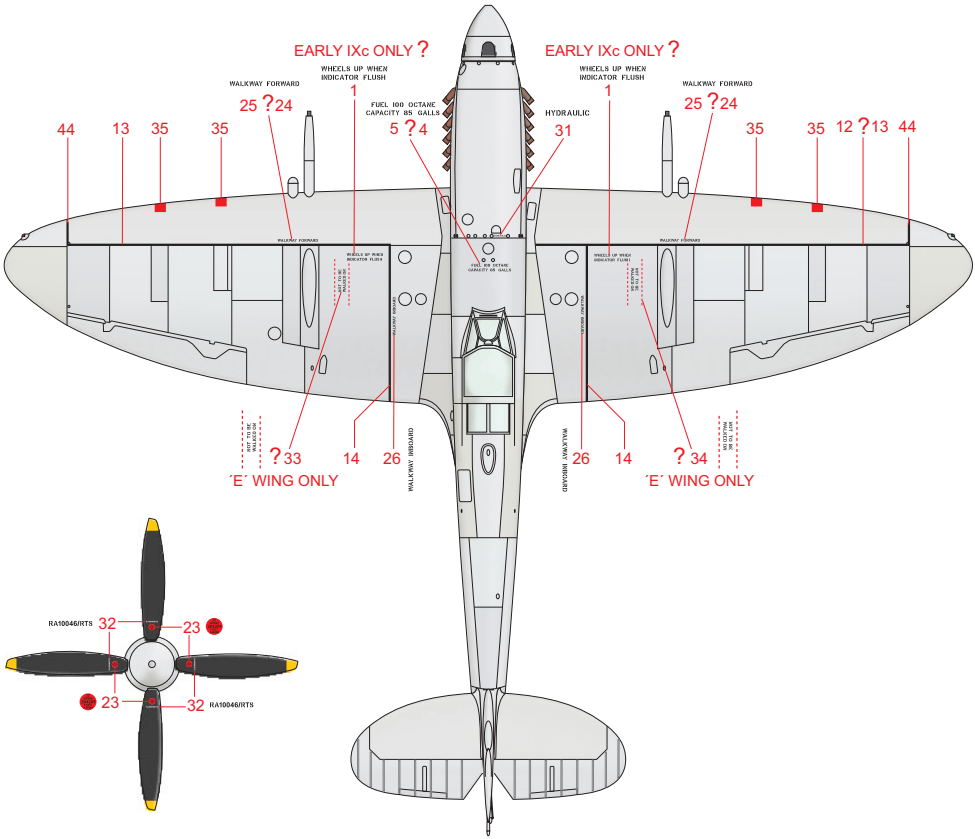

DESIGNED EXCLUSIVELY FOR Spitfire Mk.IX BY EDUARD

Eduard - Model Accessories, 435 21 Obrnice 170, Czech Republic

WWW.EDUARD.COM

1/48 Spitfire Mk.IX stencils

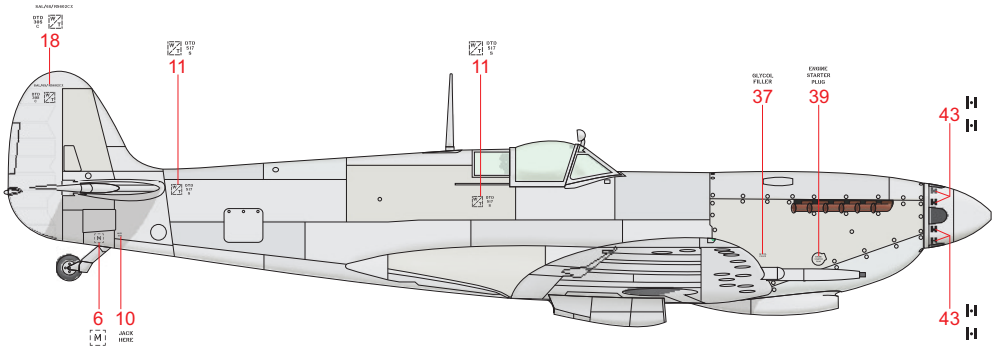

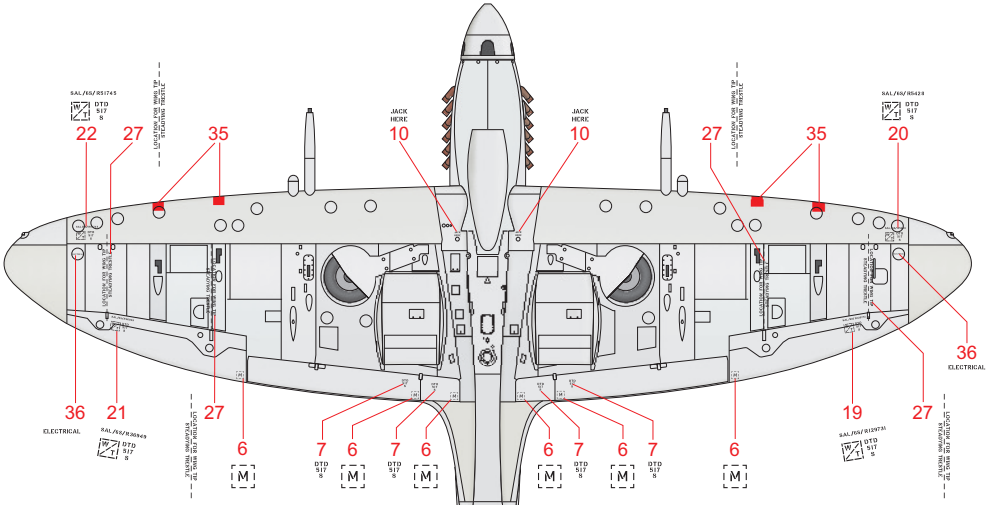

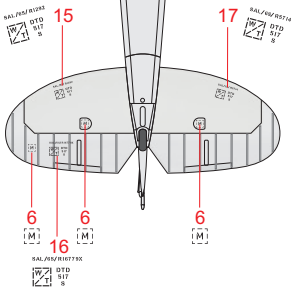

eduard